MULTI-FUNCTION LED LIGHT CONTROLLER WITH CURRENT REGULATOR

- Up-To 8 Predefined Functions
- Functions List Includes Blinker And Beckon
- Very Low Stand-By Current
- Wide Operation Voltage Range 2.0v~5.5v
- Excellent companion for Luxeon™ LED
- Minimal External Components Required
- Ultra Miniature SOT-23 Package

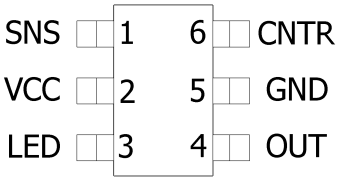

APPLICATIONS:

LED Flashlights, Bicycle lighting systems, Dive-lights, IR Beckons and illuminators.

The P103 is multi-function light controller with an implemented current regulator. Simple, yet a powerful device with up-to eight predefined Pulse-Wide Modulation (PWM) levels, blinker and beckon functions. With only a few external components P103 is very easy to implement into most applications. This device is fabricated using Low-Power CMOS technology and designed to work with high-current LED's

ELECTRICAL CHARACTERISTICS

CHARACTERISTIC	MIN	TYP	MAX	UNITS
Supply Voltage	2.0		5.5	V
Operational Supply Current		0.3		mA
Output current			25	mA
PWM frequency		180		Hz
Blinker Period		330		mSec
Beckon Period		0.1/1.0		Sec
Current limiter threshold. Pin-1		0.6		V
Operating Temperature	-40		+125	℃

MODES OF OPERATIONS

Light ON / OFF functions performed by holding the CNTR pin down for more then 0.5 second. When the light is ON, holding the CNTR pin down for less then 0.5 second. will initiate the next light-function from the list of predefined features. In standard configurations, P103 has five of the most common functions in the following sequence:

Light-Level: Duty-100% >> Light-Level: Duty-75% >> Light-Level: Duty-50% >> Blinker >> Beckon

In volume order, P103 can be ordered with the list of up-to eight functions in custom sequence.

Initialization

When a battery is connected, P103 will perform initialization self-test for approx. one second. At this time the LED output is set low (LED ON) and no other functions will be performed until the LED pin is set high (LED OFF) and controller goes in to stand-by mode.

Pulse-Wide Modulation modes

PWM functions are generated at ~180Hz period frequency by 8-Bit counter. In a custom ordered configuration, 1% to 100% PWM levels can be set to any function with ±1.0% accuracy. Modulation frequency and a maximum 25mA current on output pin have to be taken in consideration.

Blinker mode

In this mode P103 will generate ~2.0 Hertz square-wave flushing output.

Beckon mode

In this mode P103 will generate ~250mS flush-pulses in ~1.7 second periods.

LED Current Regulator

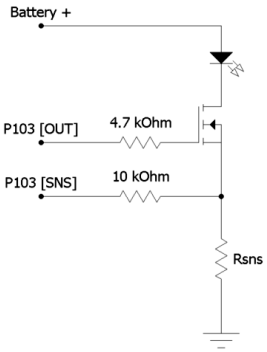

To control the LED current P103 measures voltages using a current sensing resistor. Rsns can be calculated with simple equation:

$$\text{Rsns (Ohm)} = \frac{0.6}{\text{I (Amp)}}$$

Where I = current threshold. Check with LED manufacturer specification for proper current setting. For example with LUXEON LED and current limit set to 0.8 Amp:

Rsns = 0.6/0.8 Amp = 0.75 Ohm

In PCB layout Rsns have to be located as close to the SNS input as possible.

ATTENTION: Voltage to SNS pin should never exceed VCC level.

Figure A

MULTI-FUNCTION LED LIGHT CONTROLLER WITH CURRENT REGULATOR

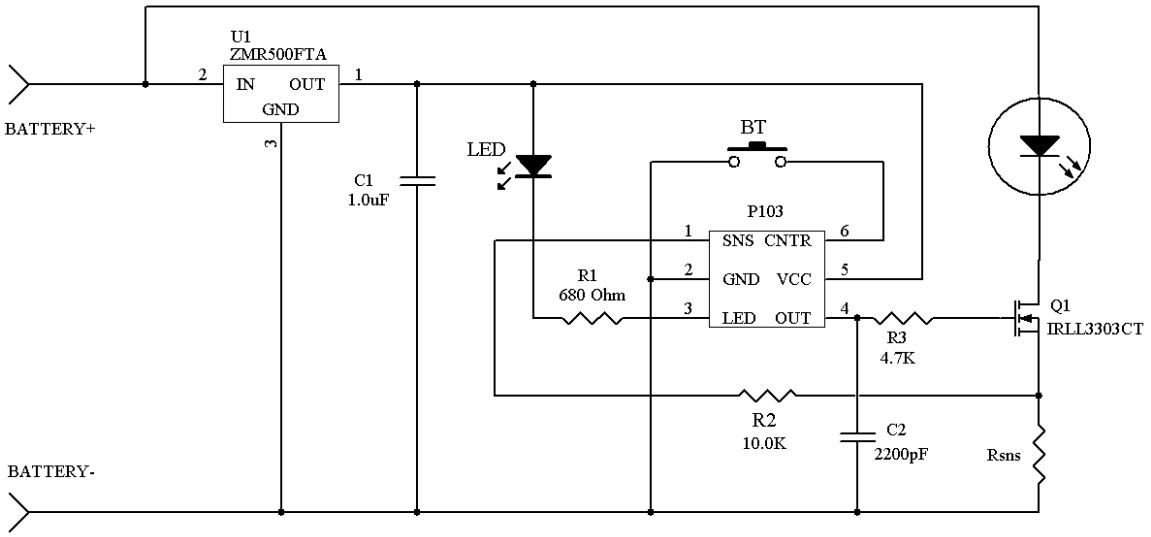

Figure B. Typical Connection

In this wiring diagram 5.0V regulator and **C1** filter capacitor are used with >6.0Volt Battery packs. For battery packs with nominal voltage range of 2.5V to 5.2V a voltage regulator and filter capacitor is not used and can be removed from this design.1000pF ceramic capacitor can be placed across the **BT** switch terminals to reduce contact noise and avoid skipping functions. Demonstration boards are available for P103 evaluation. You may contact technical support for assistance with your application and PCB layout.

OUTPUT DRIVER CONSIDERATIONS

With high current load and a discharged battery, voltage across the output transistor gate may drop below safe level of the gates threshold.
To prevent the transistor from overheating damage, reference voltage is provided with diode and capturing capacitor. In figure- C gate of output transistor connected to 4.7uF holding capacitor through 10kOhm pull-up resistor.

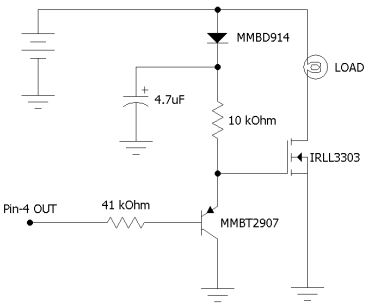

Figure C.
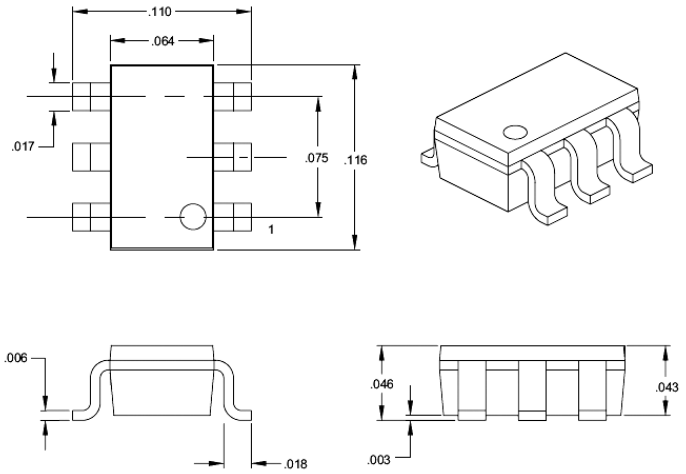
6-PIN SOT-23 PLASTIC SMALL OUTLINE PACKAGE