MULTI-FUNCTION LIGHT CONTROLLER WITH LOW BATTERY INDICATOR

- Up-To 8 Predefined Functions
- Functions List Includes Blinker And Beckon
- Very Low Stand-By Current
- Wide Operation Voltage Range 2.0v~5.5v
- Implemented Low Battery Indicator
- Minimal External Components Required
- Ultra Miniature SOT-23 Package

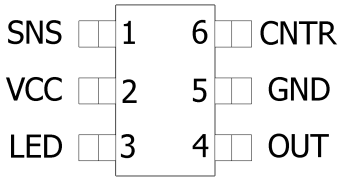

APPLICATIONS:

Pocket Flashlights, Bicycle lighting systems, Dive-lights, IR Beckons and illuminators.

The P102 is multi-function light controller with an implemented low battery indicator. Simple, yet a powerful device with up-to eight predefined Pulse-Wide Modulation (PWM) levels, blinker and beckon functions. With only a few external components P102 is very easy to implement into most applications. This device is fabricated using Low-Power CMOS technology and design to work with incandescent lamp load.

ELECTRICAL CHARACTERISTICS

CHARACTERISTIC	MIN	TYP	MAX	UNITS
Supply Voltage	2.0		5.5	V
Operational Supply Current		0.3		mA
Output current			25	mA
PWM frequency		180		Hz
Blinker Period		330		mSec
Beckon Period		0.1/1.0		Sec
Low battery threshold. Pin-1		0.6		V
Operating Temperature	-40		+125	℃

MODES OF OPERATIONS

Light ON / OFF functions performed by holding the CNTR pin down for more then 0.5 second. When the light is ON, holding the CNTR pin down for less then 0.5 second. will initiate the next light-function from the list of predefined features. In standard configurations, P102 has five of the most common functions in the following sequence:

Light-Level: Duty-100% >> Light-Level: Duty-75% >> Light-Level: Duty-50% >> Blinker >> Beckon

In volume order, P102 can be ordered with the list of up-to eight functions in custom sequence.

Initialization

When a battery is connected, P102 will perform initialization self-test for approx. one second. At this time the LED output is set low (ON) and no other functions will be performed until the LED pin is set high (OFF) and controller goes in to stand-by mode.

Pulse-Wide Modulation modes

PWM functions are generated at ~180Hz period frequency by 8-Bit counter. In a custom ordered configuration, 1% to 100% PWM levels can be set to any function with ±1.0% accuracy. Modulation frequency and a maximum 25mA current on output pin have to be taken in consideration.

Blinker mode

In this mode P102 will generate ~2.0 Hertz square-wave flushing output.

Beckon mode

In this mode P102 will generate ~250mS flush-pulses in ~1.7 second periods.

Low battery indicator

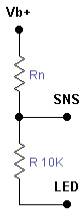

P102 constantly monitors SNS pin for battery voltage. When voltage level at SNS pin drops below 0.6 Volt, P102 will trigger Low Battery mode and LED output will generate blinking pulses indicating battery voltage is below safe level. Ground reference for resistor divider R /Rn connected to LED pin to reduce total standby current. Simple equation can be used to calculate Rn (KOhm) for required threshold:

$$Rn(KOhm)=(V_t/0.06)-10$$

Were Vt = Low Voltage threshold of the battery pack to trigger indicator. For Example with a 3.6V, 3-Cell NMh battery pack and low voltage level set to 3.0V Rn= (3.0V / 0.06) -10 = 40.0 KOhm. Correct value for the low voltage threshold can be found in battery manufacturer specifications. When low battery voltage indicator is not used, disable this feature connecting SNS pin to VCC through a 10K resistor.

ATTENTION: Voltage to SNS pin should never exceed VCC level.

MULTI-FUNCTION LIGHT CONTROLLER WITH LOW BATTERY INDICATOR

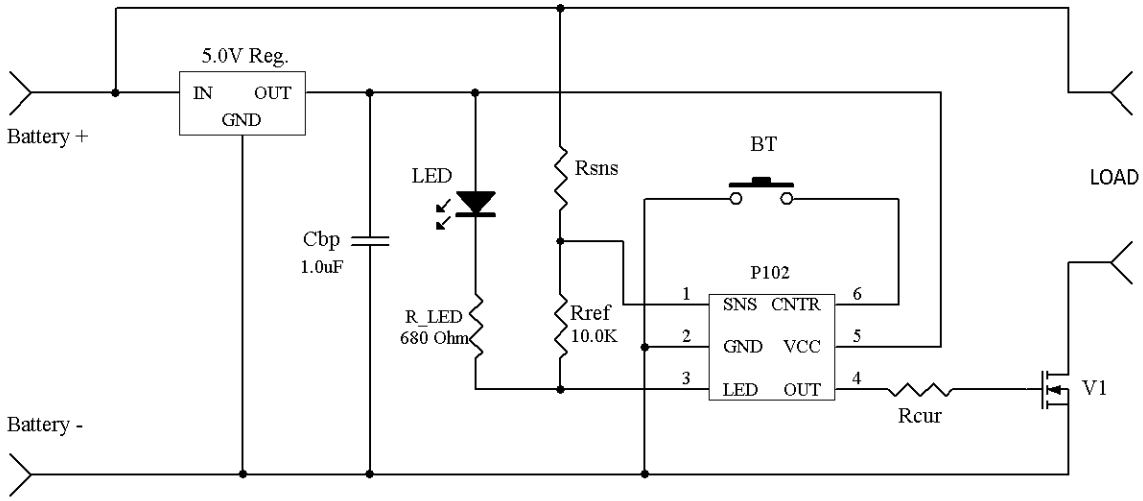

Figure A. Typical Connection

In this wiring diagram 5.0V regulator and **Cbp** filter capacitor are used with >6.0Volt Battery packs. For battery packs with nominal voltage range of 2.5V to 5.2V a voltage regulator and filter capacitor is not used and can be removed from the design. **Rcur** value have to be selected according to maximum load current and V1 specification. Typical **Rcur** value for N-MOSFT- 4.7K. 1000pF ceramic capacitor can be placed across the **BT** switch terminals to reduce contact noise and avoid skipping functions. Demonstration boards are available for P102 evaluation. You may contact technical support for assistance with your application and PCB layout.

OUTPUT DRIVER CONSIDERATIONS

With high current load and a discharged battery, voltage across the output transistor gate may drop below safe level of the gates threshold.
To prevent the transistor from overheating damage, reference voltage is provided with diode and capturing capacitor. In figure- B gate of output transistor connected to 4.7uF holding capacitor through 10kOhm pull-up resistor.

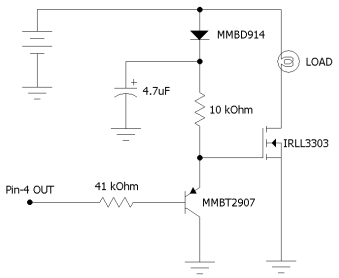

Figure B.
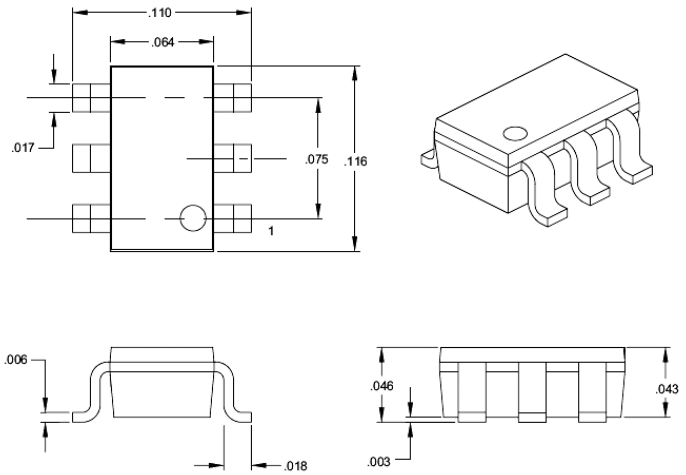
6-PIN SOT-23 PLASTIC SMALL OUTLINE PACKAGE